UB01 NEED NOT BE INSTALLED IF UB02 IS NOT PRESENT

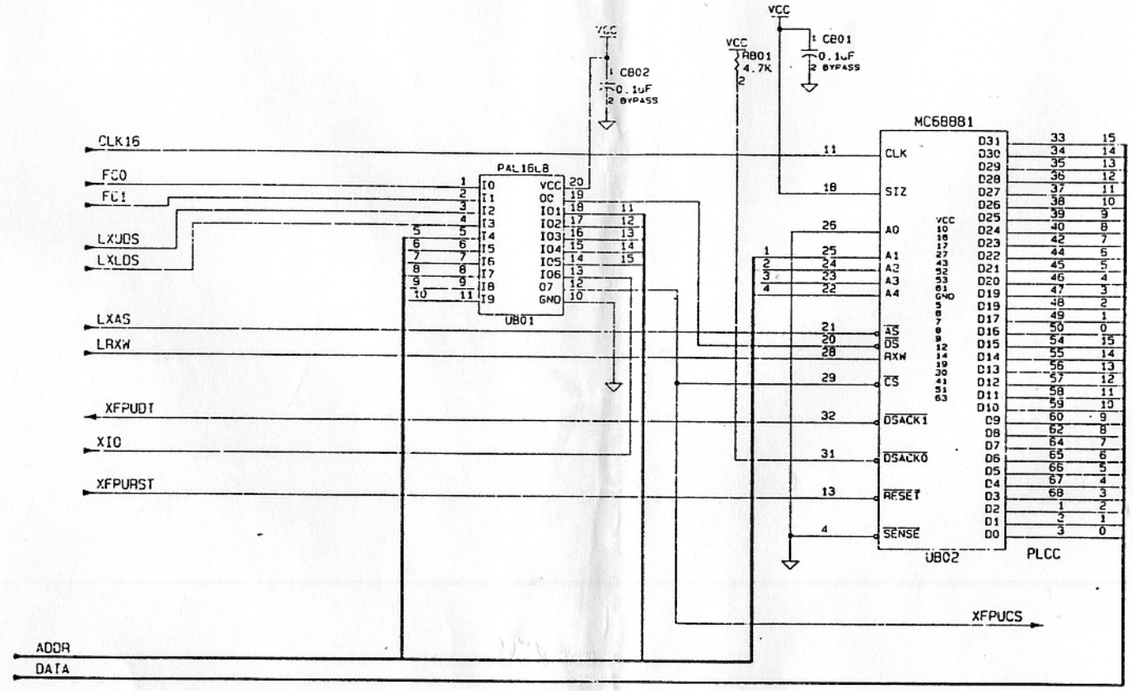

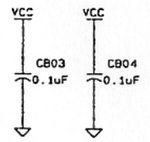

ATARI CORPORATION 1196 BORREGAS, SUNNYVALE, CA 94086			
MEGA STE			
SIZE D	CODE	NUMBER: C######-###	REV 2
		ENGINEER: JOHN HORTON	
DATE APRIL 20, 1990		SHEET 11 OF 11	

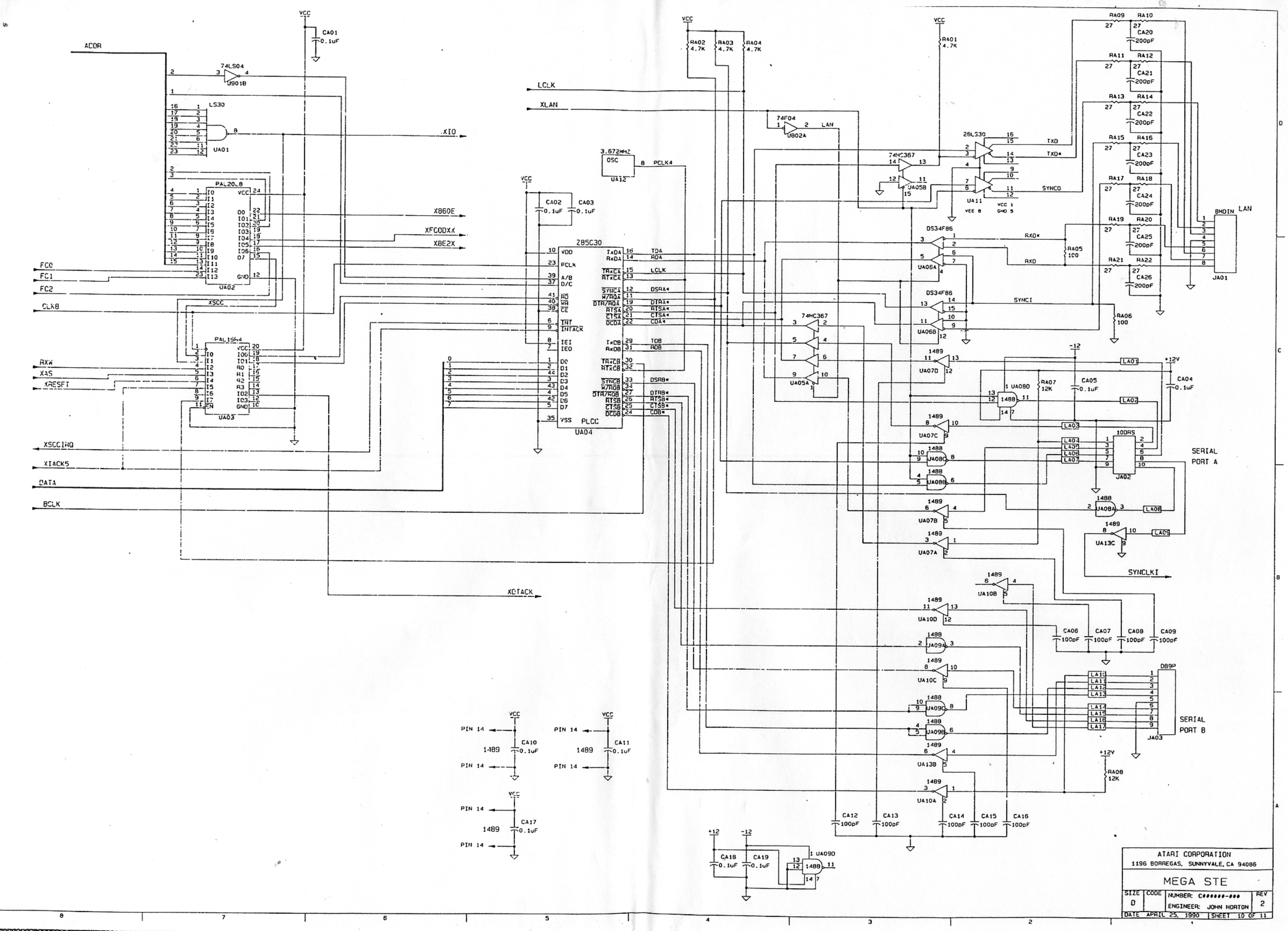
ACDR
74LS04
U901B
LS30
UA01
XIO
PAL20L8
UA02
X860E
XFCODXX
X8E2X
FC0
FC1
FC2
CLK8
XSCC
PAL16R4
UA03
RXW
XAS
XRESET
XSCCIRQ
XIACK5
DATA
BCLK
XDTACK
LCLK
XLAN
3.672MHZ
OSC
UA12
PCLK4
Z85C30
PLCC
UA04
74F04
U802A
LAN
74HC367
UA05B
26LS30
UA11
TXD
TXD*
SYNCO
DS34F86
UA06A
UA06B
RXD*
RXD
SYNCI
8MDIN
JA01
74HC367
UA05A
1489
UA07D
UA08D
1488
UA07C
UA08C
UA08B
UA07B
UA07A
10DRS
JA02
SERIAL PORT A
UA08A
UA13C
SYNCLKI
UA10B
UA10D
UA09A
UA10C
UA09C
UA09B
UA13B
UA10A
DB9P
JA03
SERIAL PORT B
UA09D
PIN 14
CA10 0.1uF
CA11 0.1uF
CA17 0.1uF
CA18 0.1uF
CA19 0.1uF
CA12 100pF
CA13 100pF
CA14 100pF
CA15 100pF
CA16 100pF
CA06 100pF
CA07 100pF
CA08 100pF
CA09 100pF
RA08 12K
RA07 12K
CA05 0.1uF
CA04 0.1uF
+12V
-12
ATARI CORPORATION
1196 BORREGAS, SUNNYVALE, CA 94086
MEGA STE
SIZE D
CODE
NUMBER: C######-###
ENGINEER: JOHN HORTON
REV 2
DATE APRIL 25, 1990
SHEET 10 OF 11

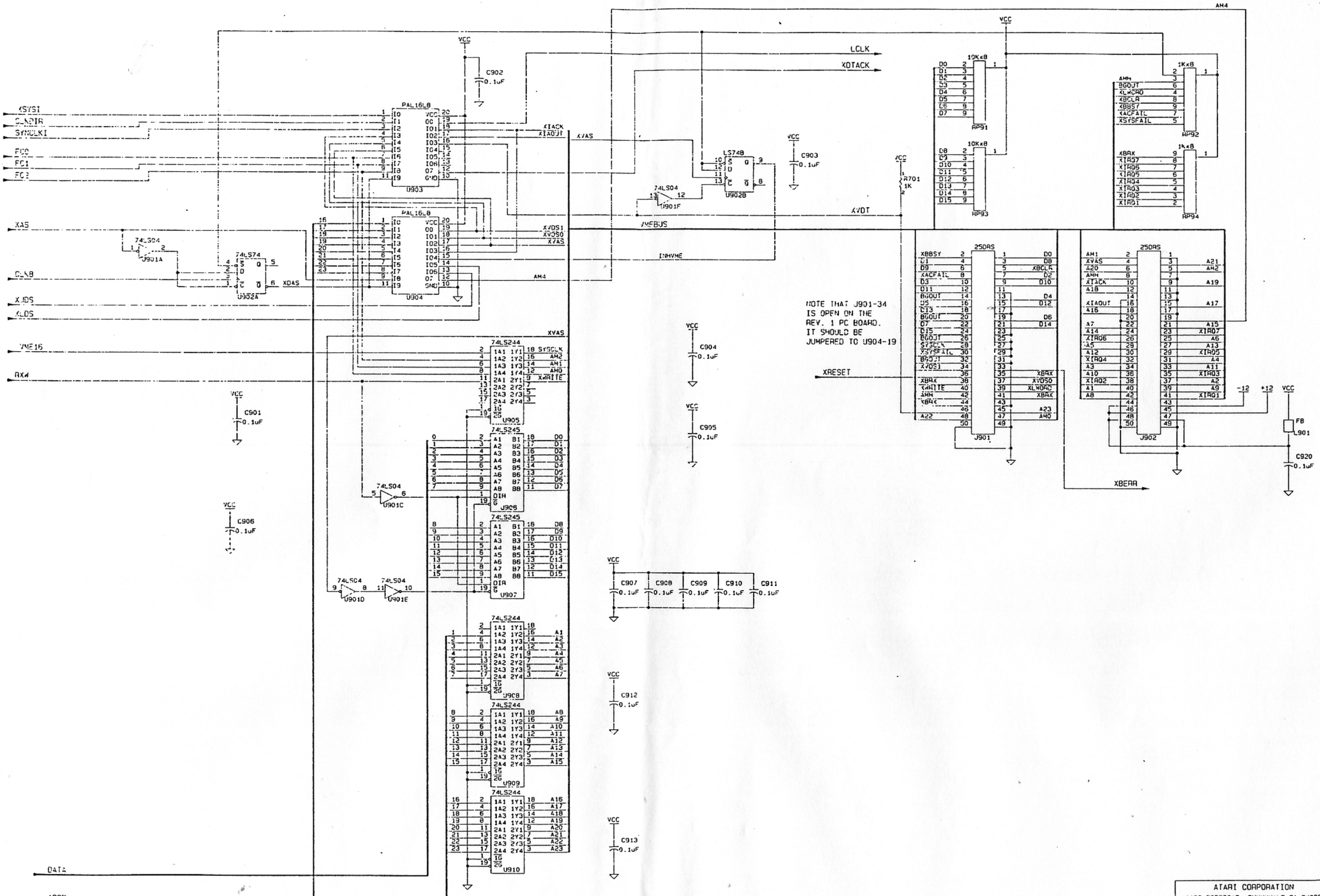

ATARI CORPORATION
1196 BORREGAS, SUNNYVALE, CA 94086

MEGA STE

SIZE	CODE	NUMBER: C[illegible]-000	REV
D		ENGINEER: JOHN HORTON	2
DATE APRIL 20, 1990		SHEET 9 OF 11	

ce:

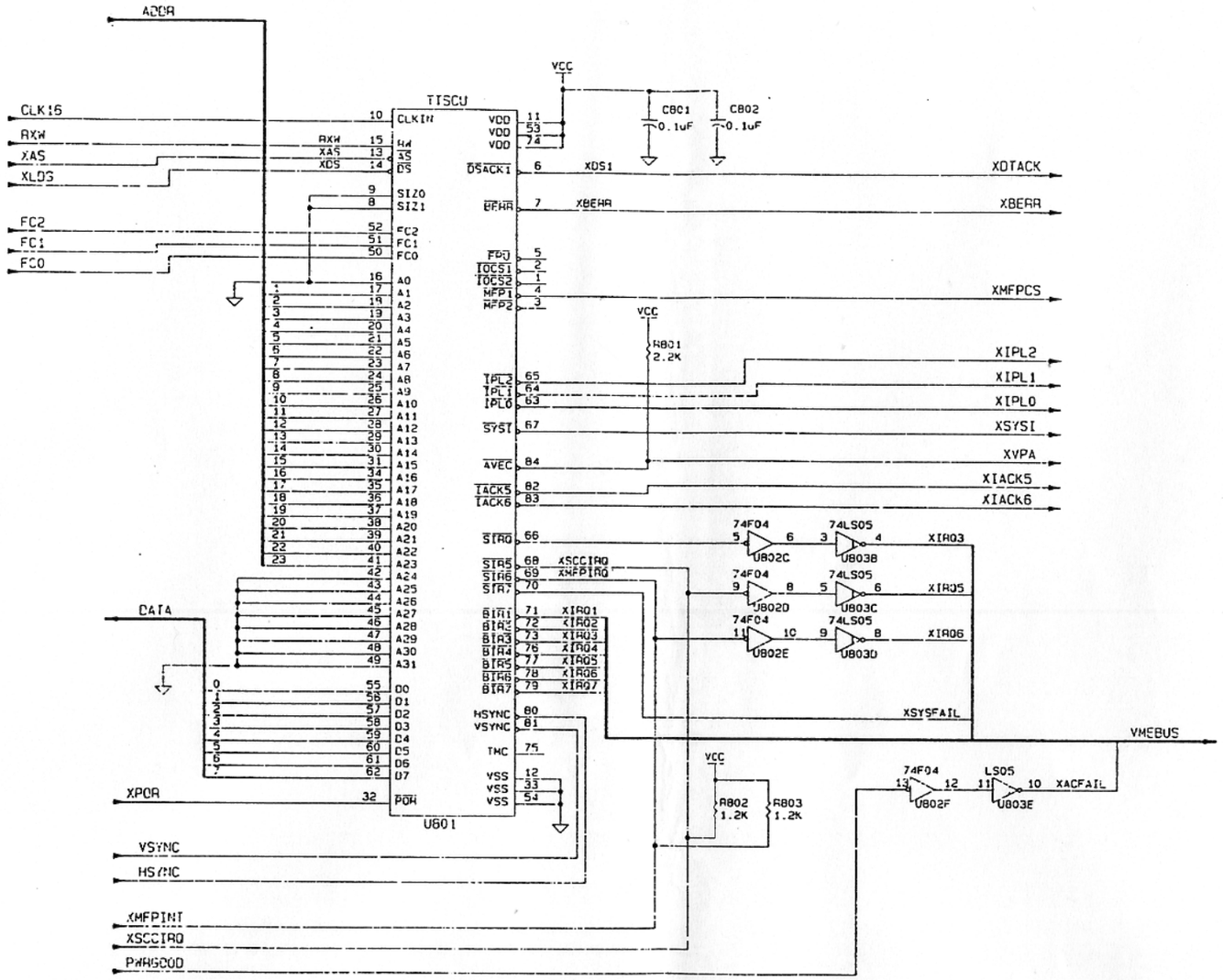

ATARI CORPORATION			
1196 BORREGAS, SUNNYVALE, CA 94086			
MEGA STE			
SIZE D	CODE	NUMBER: C******-***	REV 2
		ENGINEER: JOHN HORTON	
DATE APRIL 25, 1990		SHEET 8 OF 11	

ce:

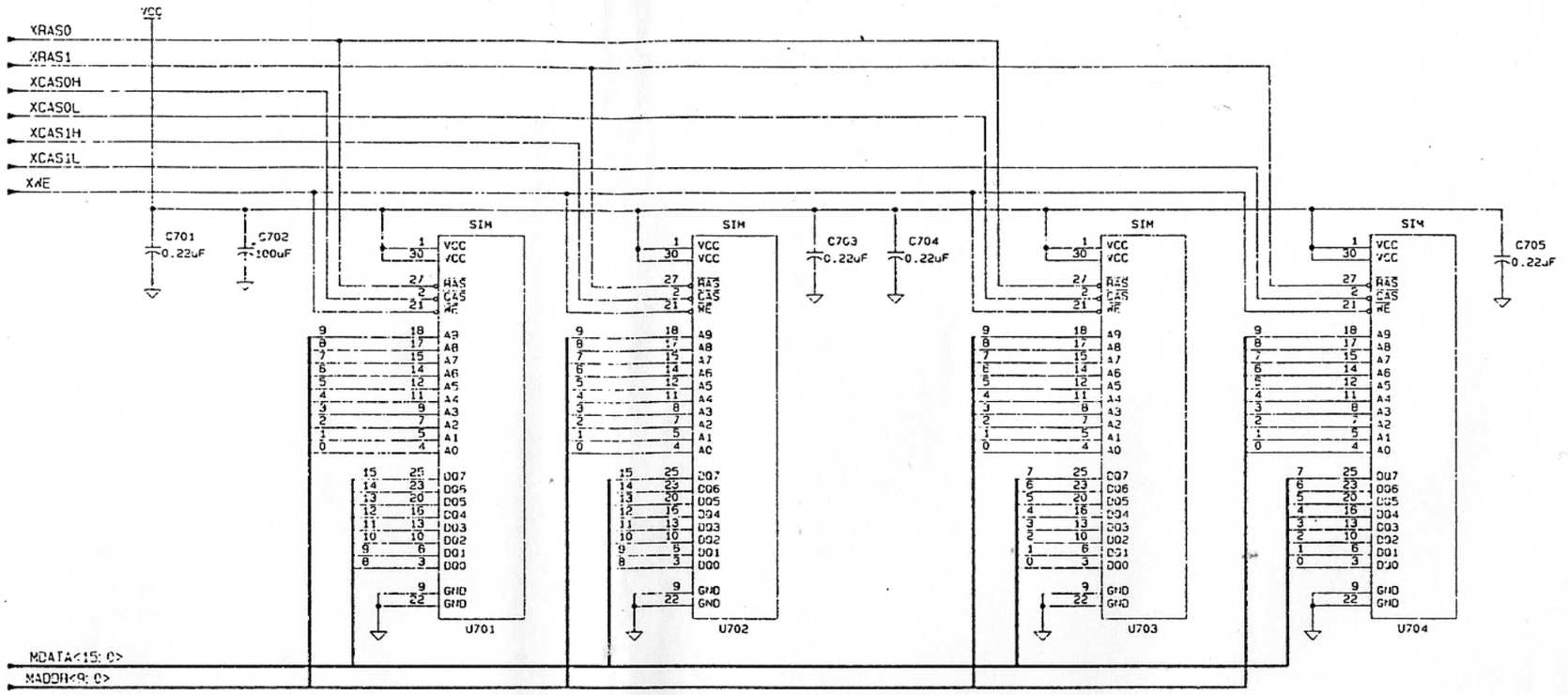

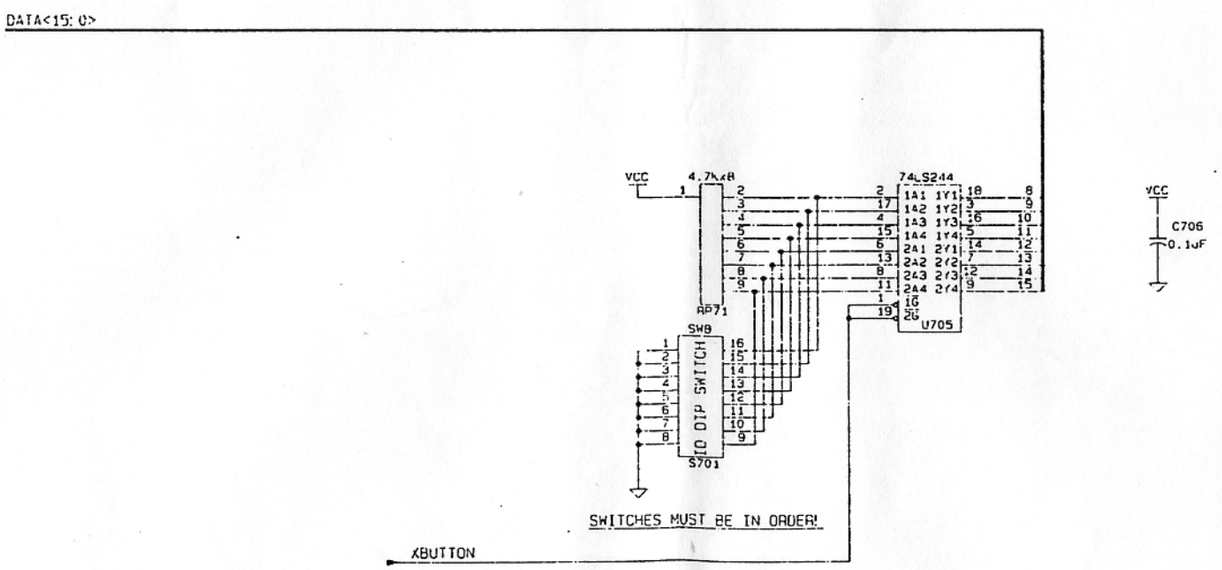

Atari Corporation			
1196 Borregas Ave, Sunnyvale, CA 94086			
MEGA STE			
SIZE D	CODE	C######-###	REV 2
		ENGINEER: JOHN HORTON	
DATE APRIL 20, 1990		SHEET 7 of 11	

74LS02 WAS ADDED TO FIX THE SOUND
A HOLD PROBLEM WHICH OCCURS WITH
4117 (SHIFTERS) OLDER THAN REV. D

2/14/90 JH

XLD

SCLK

XRD

SD<7:0>

+12V

-5V

FCLK

8.2V

6.2V

74F374

DAC0802

MF4

LF347

LM78L82

LMC1992

GIL

GIR

LEFT

RIGHT

AUDIO

AUDIOS

AUDIOI

MWD

MWK

XMWE

Ground Plane This Area

Atari Corporation
1196 Borregas Ave. Sunnyvale, CA 94086

MEGA STE

SIZE	CODE	C#######-###	REV
D		ENGINEER: JOHN HORTON	2
DATE APRIL 20, 1990		SHEET 8 of 11	

CLK16

VCC

C501 0.1uF C502 0.1uF C503 0.1uF C504 0.1uF C505 0.1uF

GSTMCU

VCC R599 10K

X&S
XLDS
XUDS
RXW
XDTACK
FC2
FC1
FC0

CLK8
CLK4
XBR
XBLTBG
XBGK
DE
SNDCS
SNDIR
XFCS
RDY

HSYNC
VSYNC

XROM4
XROM3
XROM2

XDISKINT

N6850
KHZ500

XBUTTON

XRTCCS
XRTCHO
XRTCWR
XRAS0
XCAS0H
XCAS0L
XRAS1
XCAS1H
XCAS1L
XWE

MADR<9:0>

XRESET

XBLTINT
XSINT

ADDR<23:1>
DATA<15:0>

U501

VCC R525 1K

XAMA
FDINT
XHDINT

GSTSHFTR

MC
MHZ16
COLOR
LOAD
DE
BLANK
HDAT
WDAT
LATCH
MONO
SCLK
SREQ
SLOAD
MDATA<15:0>
XMWE
MWD
MWK
FCLK
XLD
XRD
LOMP
GND
SD<7:0>

U502

74HCT04 U309B

VCC C507 0.1uF C508 0.1uF

R501 1K
R503 2K
R508 1K
R518 2K
R524 1K
R529 2K

Q501 2N3904
Q502 2N3904
Q503 2N3904
Q504 2N3904

R502 75
R504 75
R505 75 R
R516 75
R520 75
R522 75 G
R528 75
R530 75 B

VCC FB L501 C506 0.47uF

32MHZ

VCC FB L506 C510 0.1uF R534 27 R536 1K R537 100

VCC R511 4.7K

74S257 U504

MC
MONOMON

12V R527 1.2K

VIDEO DIN13 J501

VSYNC 33 R531 L503
HSYNC 33 R533 L504
AUDIOI L505
L506
L507
L508

C509 47uF

AUDIO

VCC FB L509

12V R535 75 C511 470uF Q505 2N3904 R543 150 C512 100uF R547 1.5K R552 2.2K *

STMOD MOD U505

R538 1K
R546 0 *
L510 6 4 * 3 1
C516 120pF *
1K * R560

C513 0.1uF

R549 0 ← Remove for PAL

R556 0 *

C514 15uF
C519 15uF
C521 15uF
R566 5.6K
C522 .001uF
R567 1K

MC1377 U503 DIP 20

C515 2200pF
C520 2200pF
1.2K R564
1.2K R565
DL1 *
C517 0.1uF
C518 100uF

R568 47K

* - Requires value change for PAL

HSYNC
VSYNC
74LS86 U308A
74HCT04 U309C

C523 0.1uF C524 0.1uF C525 0.01uF C526 0.01uF C527 .001uF C528 1uF

Stuffed for Modulator Systems ONLY!

R569 10K
1N914 D501
1N914 D502
Q506 2N3904
R570 100
R571 150

Stuffed in NON-Modulator Versions ONLY

Atari Corporation
1196 Borregas Ave. Sunnyvale, CA 94086

MEGA STE

SIZE	CODE	C######-###	REV
D		ENGINEER: JOHN MORTON	2
DATE APRIL 25, 1990		SHEET 5 of 11	

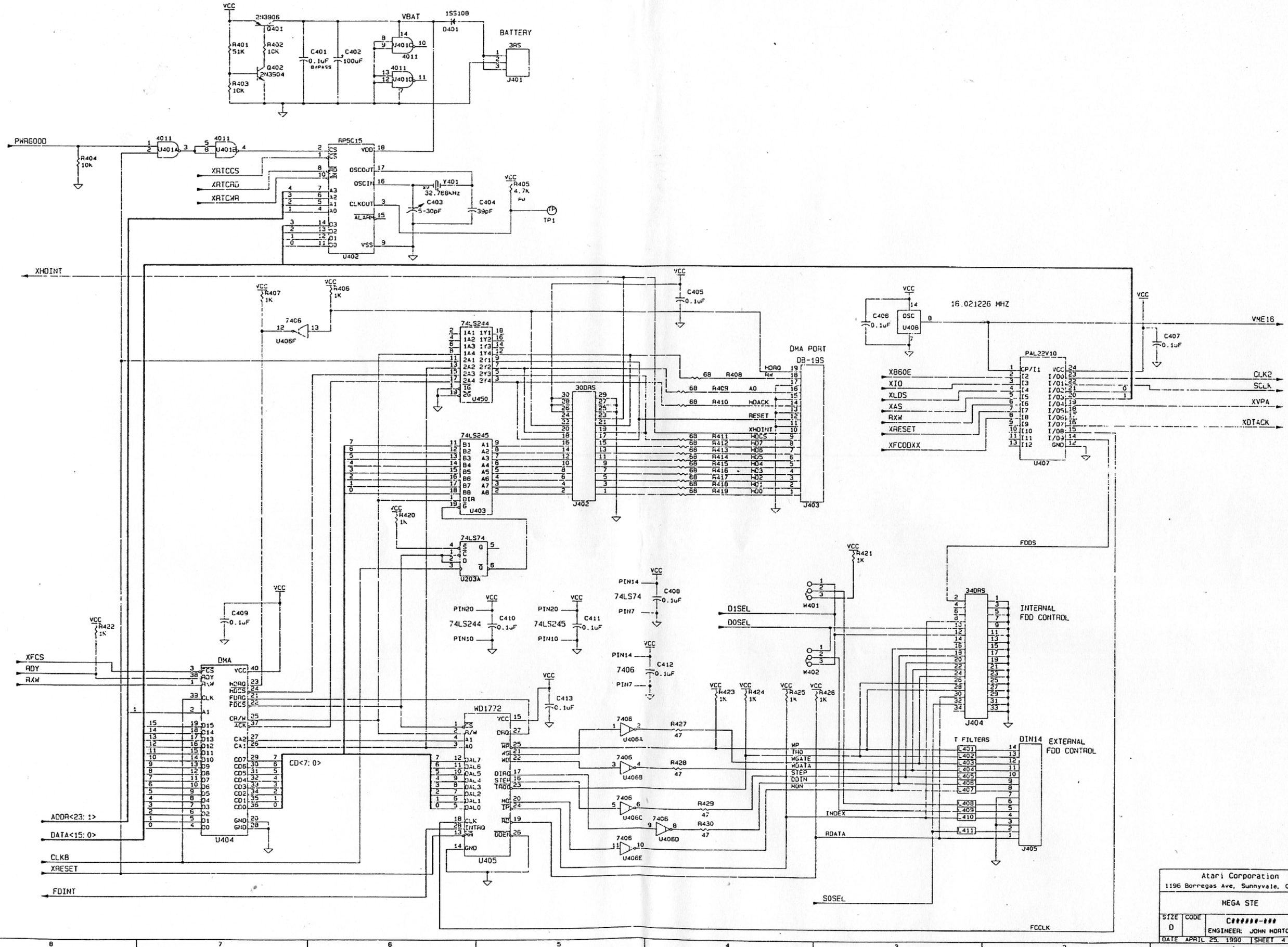

Atari Corporation
1196 Borregas Ave, Sunnyvale, CA 94086

MEGA STE

SIZE	CODE		REV
D		C######-### ENGINEER: JOHN HORTON	2

DATE APRIL 25, 1990 SHEET 4 of 11

MC68850 (2MHZ) PARTS MUST BE USED!

KHZ500
N6850
E
RXW
CLK2
SNDIR
SNDCS
DE
XMFPCS
XLDS
XDTACK
MONOMON
XSINT
XRESET
XMFPINT
XIACK6
DATA<15:0>
ADDR<23:1>

MIDI OUT
MIDI IN
KEYBOARD
PARALLEL PORT
SERIAL PORT
DISEL
DOSEL
SOSEL
XLAN
CLKDIR
AUDIOS
BCLK
XBLTINT
XDISKINT

Atari Corporation	
1196 Borregas Ave. Sunnyvale, CA 94086	
MEGA STE	
SIZE D	CODE C#######-###
ENGINEER: JOHN HORTON	REV 2
DATE APRIL 20, 1990	SHEET 3 of 11

Stuffed in PAL systems only

Stuffed in non-PAL systems only

A224 AND A225 INSTALLED ONLY WHEN U204 IS NOT PRESENT

ROM jumper settings

Part Type	W201	W202	W203
27256	Don't Care	1 and 2	N/C
27512	2 and 3	2 and 3	N/C
571001/27C1000/531000	2 and 3	2 and 3	2 and 3
27010/571000/27C1001	1 and 2	2 and 3	1 and 2

Note: Jumpers are preset for 1M Roms
(See default settings below)

8	7	6	5	4

Atari Corporation
1196 Borregas Ave. Sunnyvale. CA 94088

MEGA STE

SIZE	CODE		REV
D		C######-001	2
		ENGINEER: JOHN HORTON	
DATE: APRIL 20, 1990		SHEET 2 of 11	

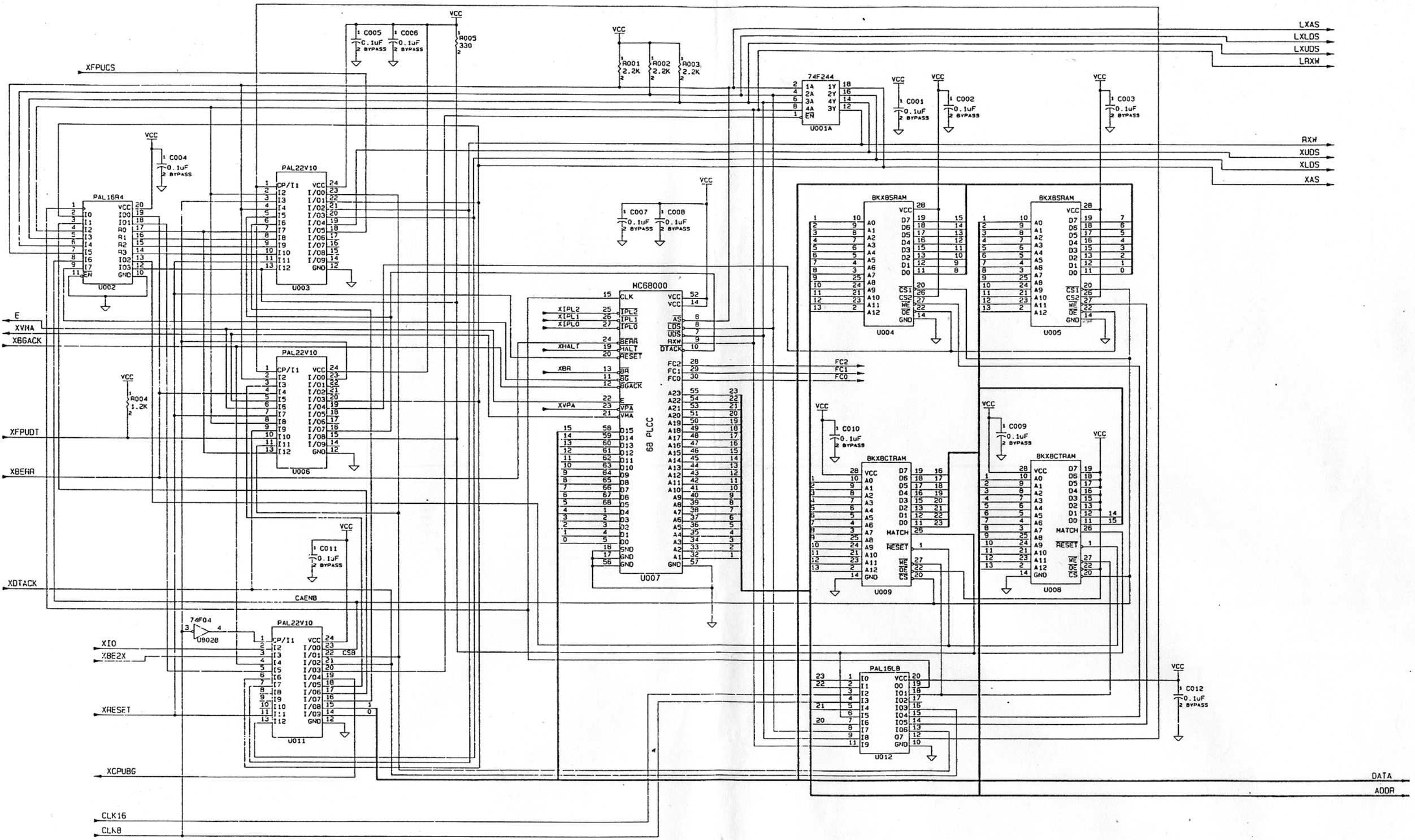

ATARI CORPORATION 1196 BORREGAS, SUNNYVALE, CA 94086			
MEGA STE			
SIZE D	CODE	NUMBER: C######-### ENGINEER: GREG MOKLER	REV 2
DATE APRIL 25, 1990		SHEET 1 OF 11	