REV	REVISIONS DESCRIPTION	DATE	APPROVE
	PRODUCTION RELEASE		
M	REVISED PER ECO. NO. 00225	4/22/86	S. Okazaki
K	REVISED PER ECO. NO. 00191	1-17-85	
L	REVISED PER ECO. NO. 00217	3-27-86	

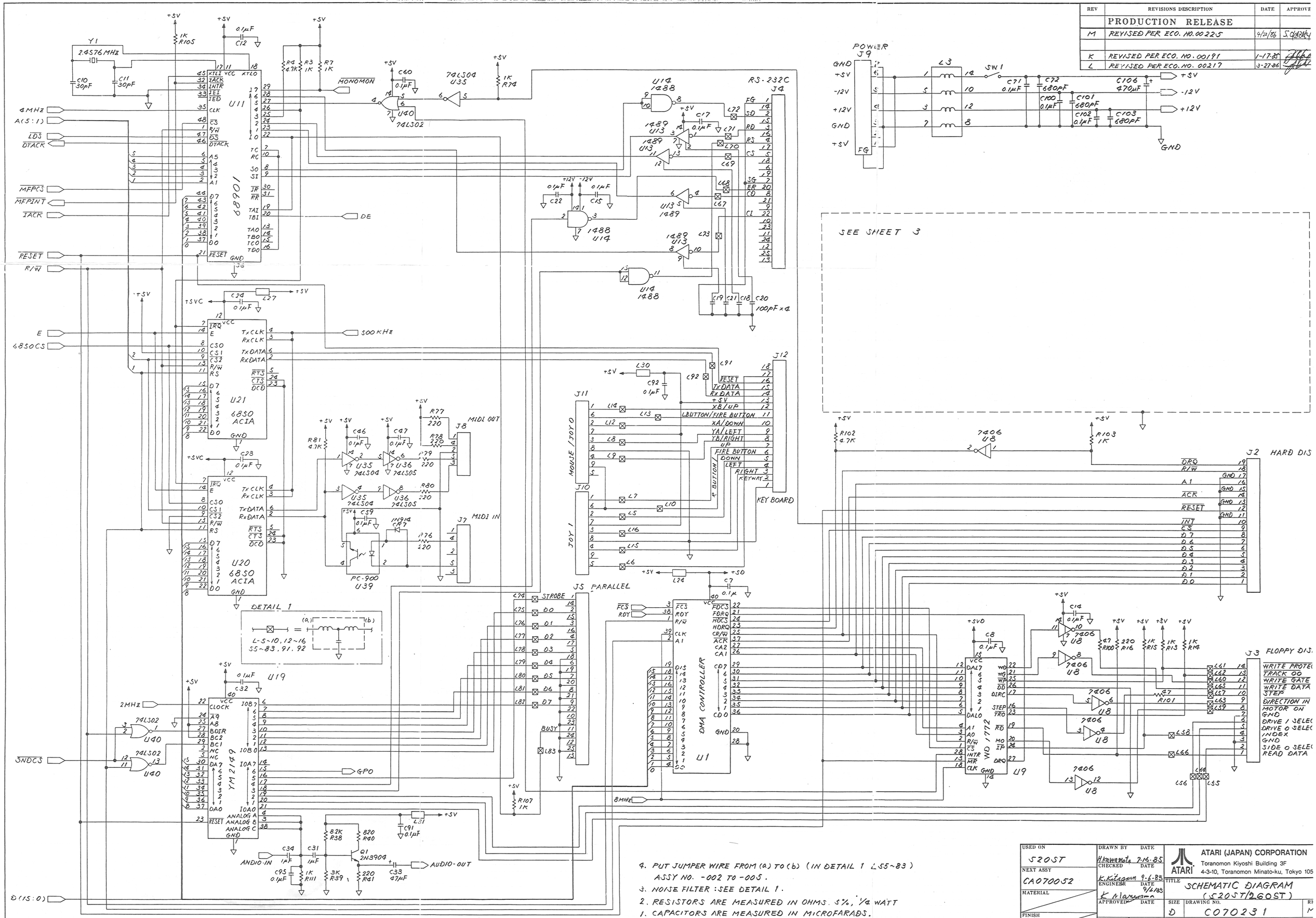

4. PUT JUMPER WIRE FROM (a) TO (b) (IN DETAIL 1 L55~83) ASSY NO. -002 TO -005.
3. NOISE FILTER : SEE DETAIL 1.
2. RESISTORS ARE MEASURED IN OHMS. 5%, 1/4 WATT
1. CAPACITORS ARE MEASURED IN MICROFARADS.

NOTES-UNLESS OTHERWISE SPECIFIED :

USED ON: 520ST	DRAWN BY: H. Kawamoto DATE: 7-15-85	ATARI (JAPAN) CORPORATION Toranomon Kiyoshi Building 3F 4-3-10, Toranomon Minato-ku, Tokyo 105
NEXT ASSY: CA070052	CHECKED: K. Kitagawa DATE: 9-6-85	TITLE: SCHEMATIC DIAGRAM (520ST/260ST)
MATERIAL	ENGINEER: K. Mayuzumi DATE: 9/6/85	
FINISH	APPROVED DATE	SIZE: D DRAWING NO.: C070231
	APPROVED: K.K. DATE: 9/6/85	SCALE: NONE SHEET 1 OF 3

REV	REVISIONS DESCRIPTION	DATE	APPROVED
	SEE SHEET 1		

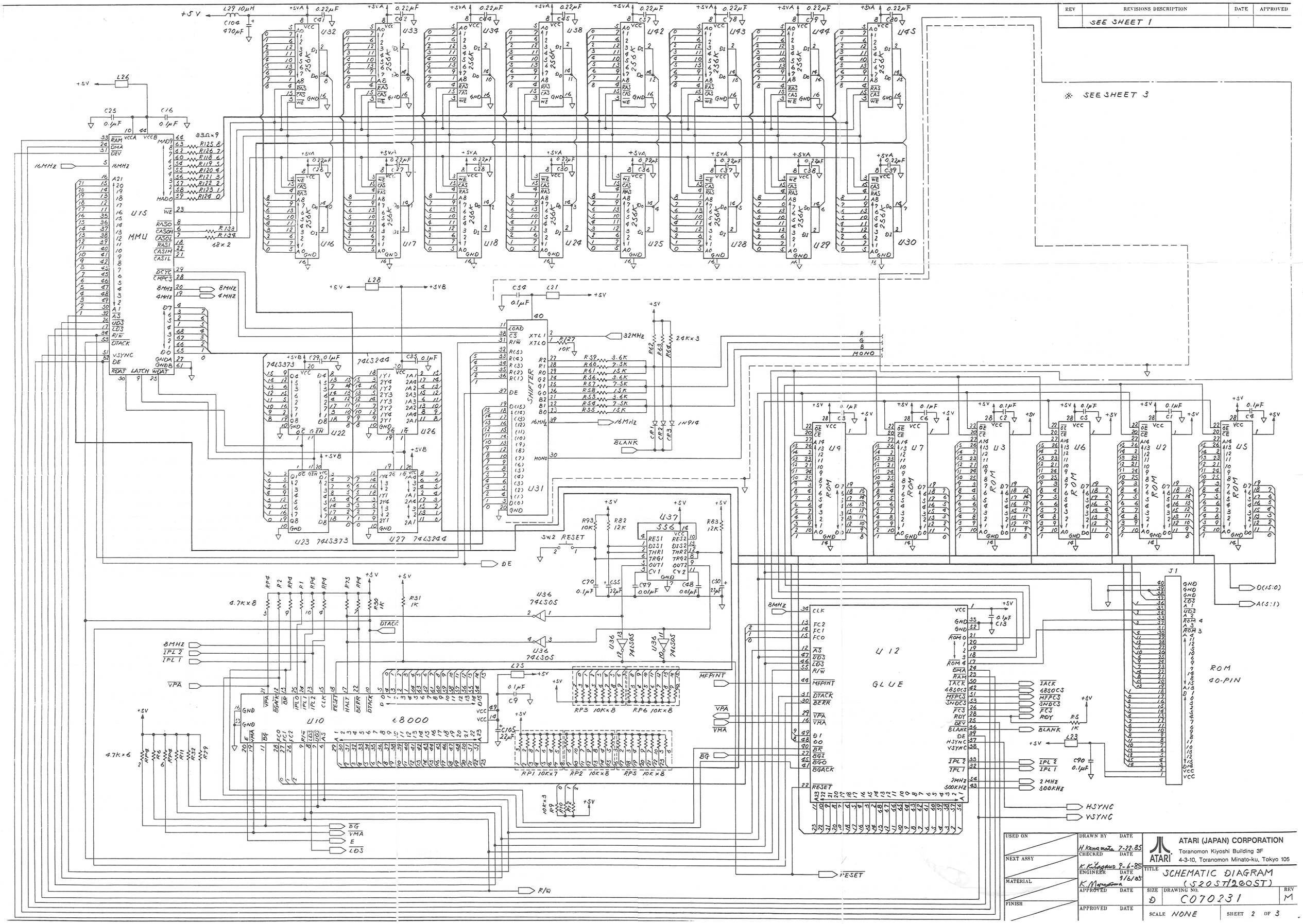

USED ON	DRAWN BY	DATE	ATARI (JAPAN) CORPORATION
	H. Kawamata	7-22-85	Toranomon Kiyoshi Building 3F
NEXT ASSY	CHECKED	DATE	4-3-10, Toranomon Minato-ku, Tokyo 105
	K. Kitagawa	9-6-85	TITLE SCHEMATIC DIAGRAM
MATERIAL	ENGINEER	DATE	(S20ST/260ST)
	K. Matsumura	9/6/85	SIZE D — DRAWING NO. C070231 — REV M
FINISH	APPROVED	DATE	
	APPROVED	DATE	SCALE NONE — SHEET 2 OF 3

REV	REVISIONS DESCRIPTION	DATE	APPROV
	SEE SHEET 1		

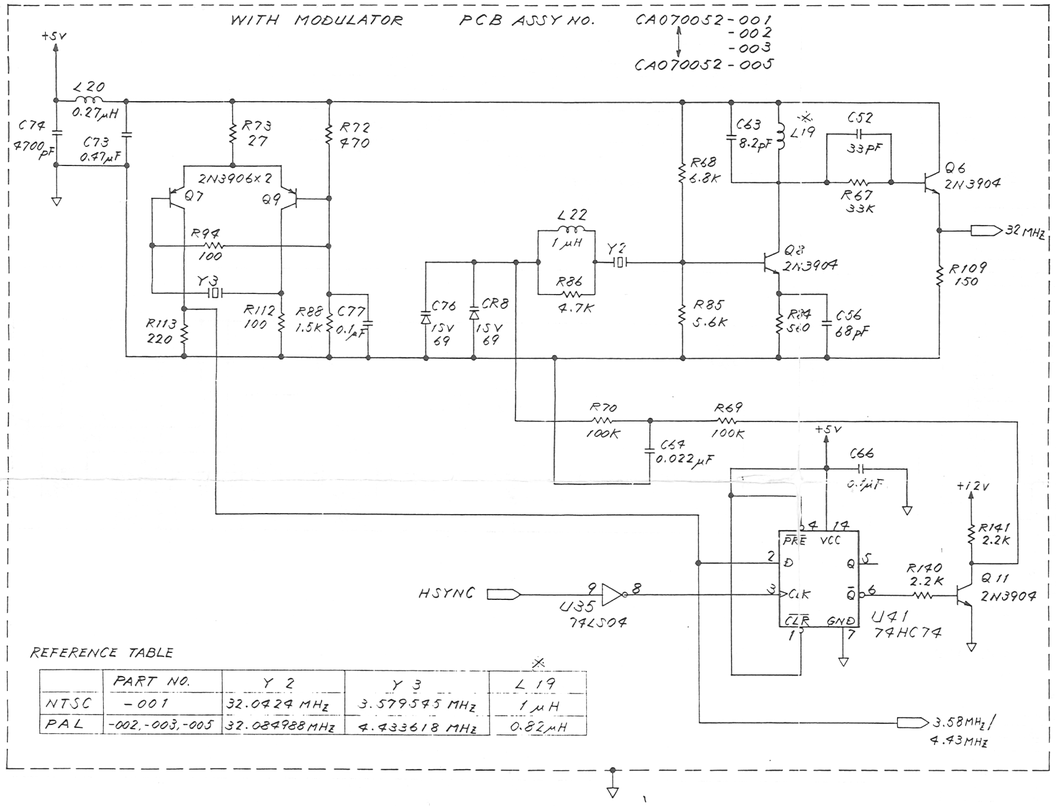

REFERENCE TABLE

	PART NO.	Y 2	Y 3	L 19
NTSC	-001	32.0424 MHz	3.579545 MHz	1 μH
PAL	-002,-003,-005	32.084988 MHz	4.433618 MHz	0.82 μH

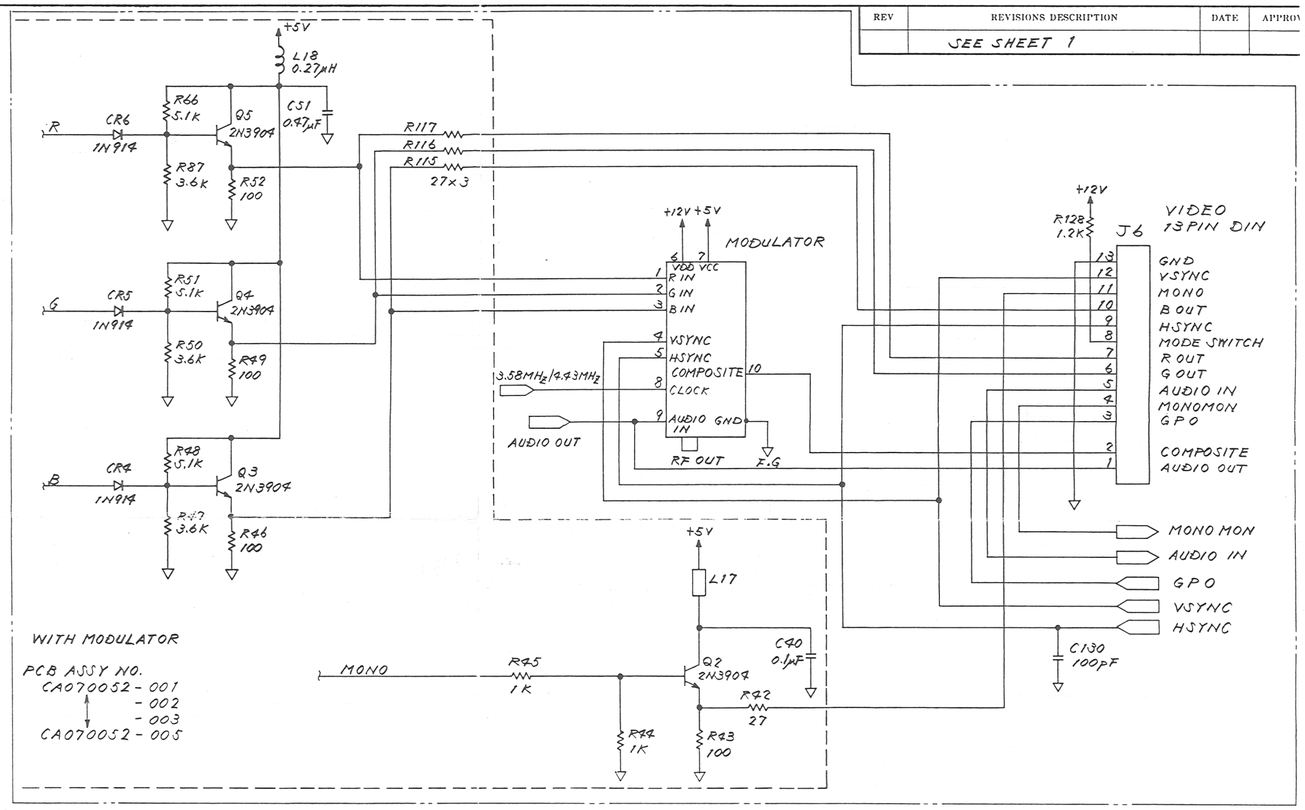

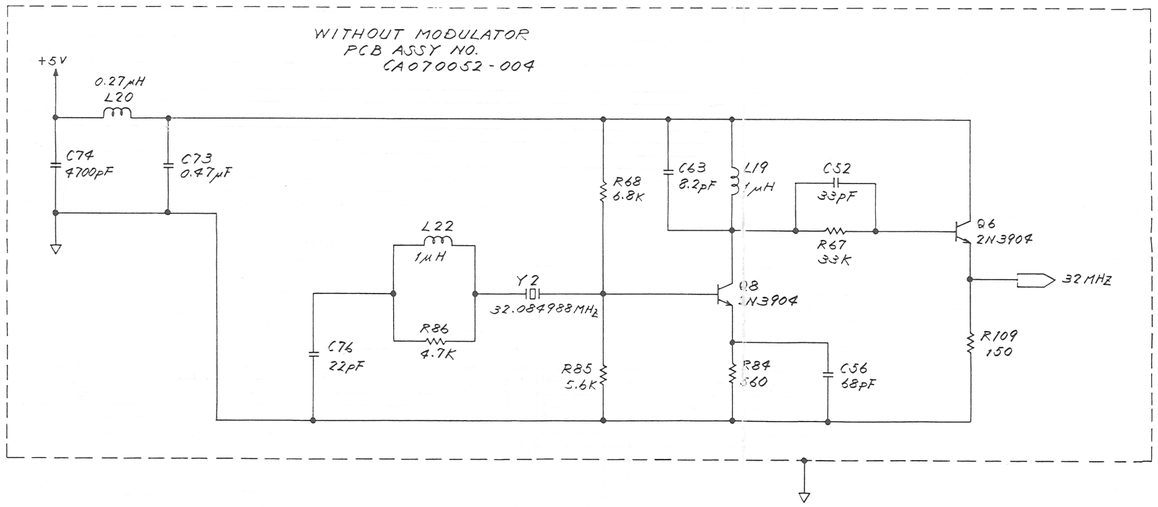

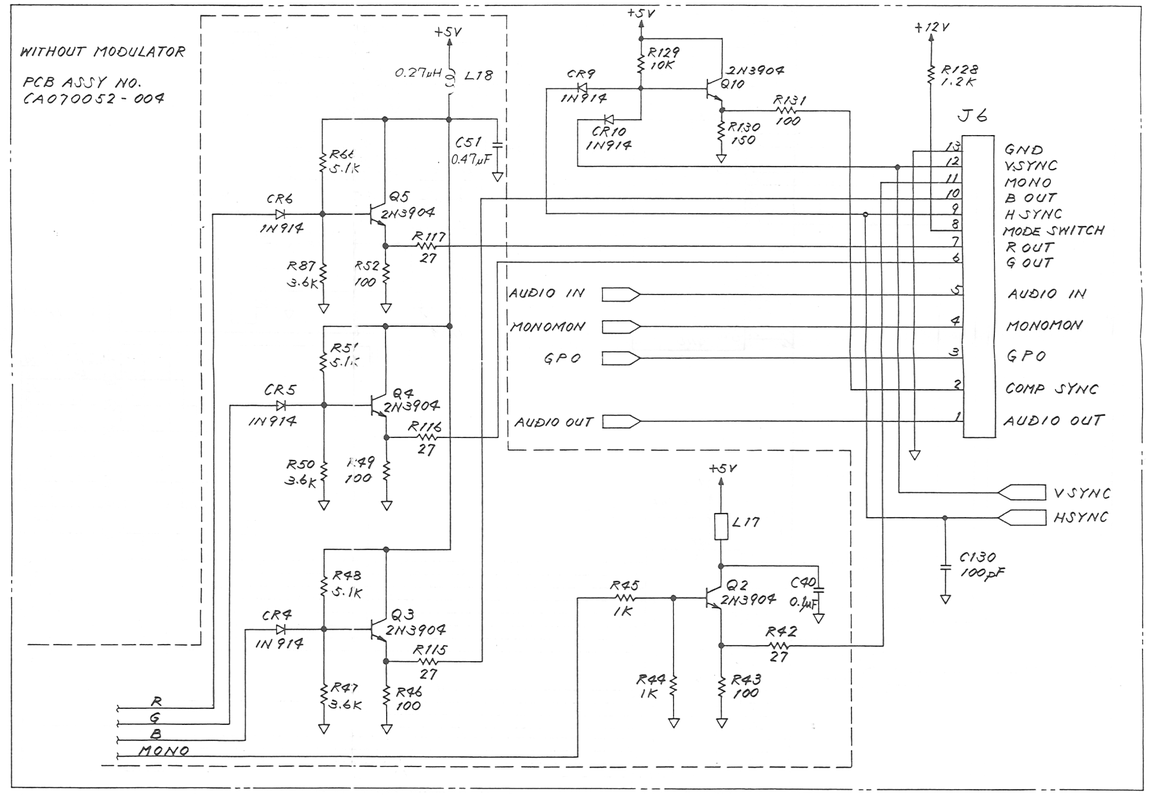

USED ON	DRAWN BY	DATE	ATARI (JAPAN) CORPORATION
	N. Hanamura	6-5-85	Toranomon Kiyoshi Building 3F
NEXT ASSY	CHECKED	DATE	4-3-10, Toranomon Minato-ku, Tokyo 1
	K. Kitagawa	6-7-85	TITLE
MATERIAL	ENGINEER	DATE	SCHEMATIC DIAGRAM
	K. Nagayama	6-7-85	(S20ST/2GOST)
FINISH	APPROVED	DATE	SIZE / DRAWING NO.
	APPROVED	DATE	D C070231
			SCALE NONE / SHEET 3 OF 3